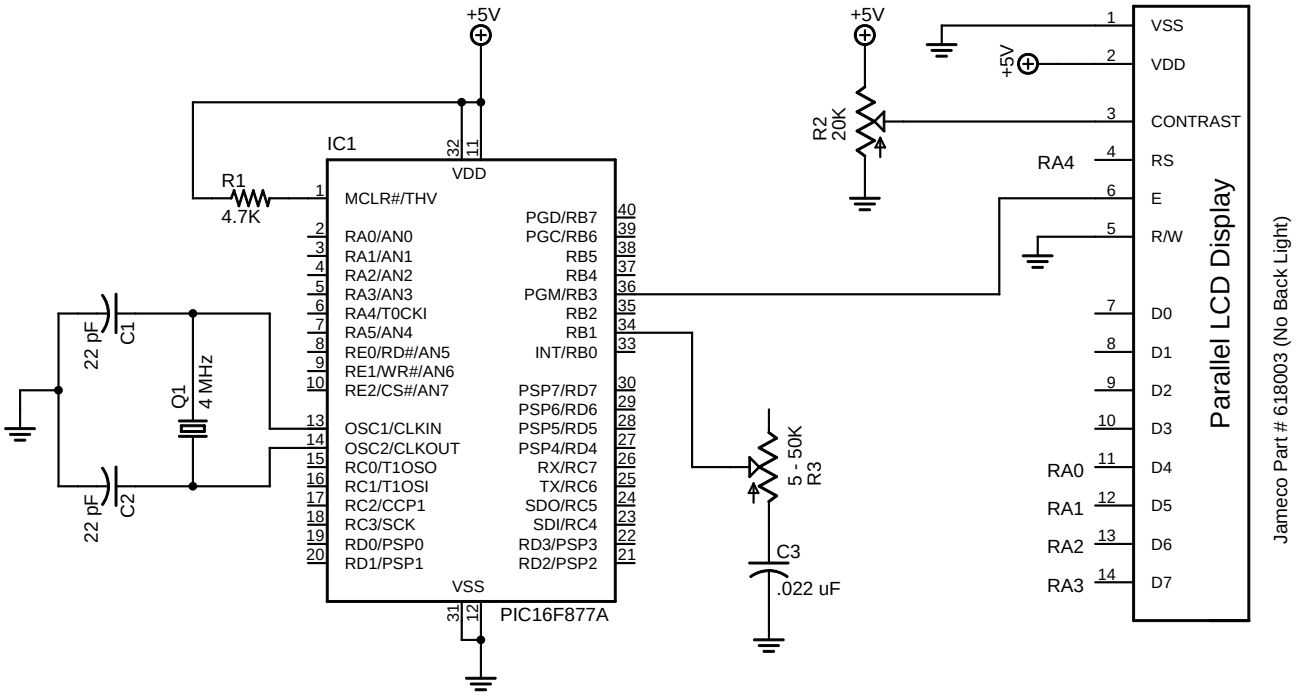
+5V
IC1
VDD
R1
4.7K
MCLR#/THV
RA0/AN0
RA1/AN1
RA2/AN2
RA3/AN3
RA4/T0CKI
RA5/AN4
RE0/RD#/AN5
RE1/WR#/AN6
RE2/CS#/AN7
OSC1/CLKIN
OSC2/CLKOUT
RC0/T1OSO
RC1/T1OSI
RC2/CCP1
RC3/SCK
RD0/PSP0
RD1/PSP1
PGD/RB7
PGC/RB6
RB5
RB4
PGM/RB3
RB2
RB1
INT/RB0
PSP7/RD7
PSP6/RD6
PSP5/RD5
PSP4/RD4
RX/RC7
TX/RC6
SDO/RC5
SDI/RC4
RD3/PSP3
RD2/PSP2
VSS
PIC16F877A
22 pF
C1
Q1
4 MHz
22 pF
C2
5 - 50K
R3
C3
.022 uF
R2
20K
RA4
RA0
RA1
RA2
RA3
VSS
VDD
CONTRAST
RS
E
R/W
D0
D1
D2
D3
D4
D5
D6
D7
Parallel LCD Display
Jameco Part # 618003 (No Back Light)

lcd3