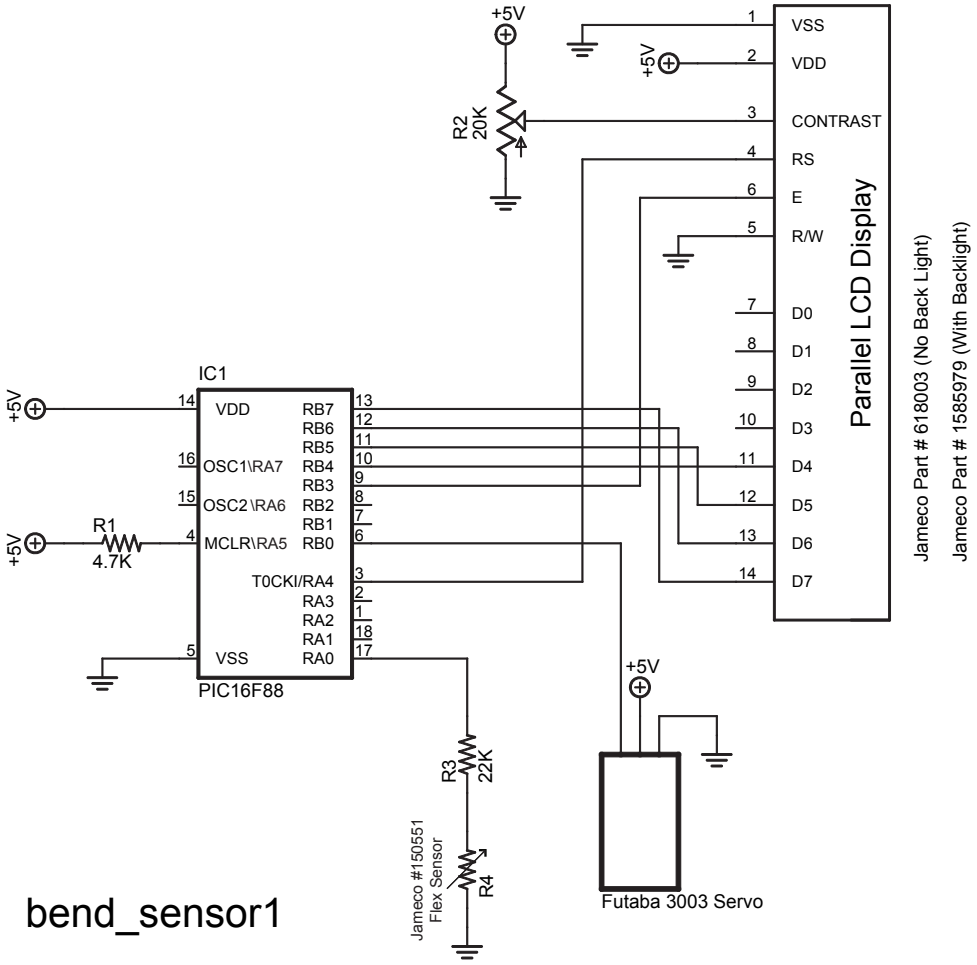

bend_sensor1