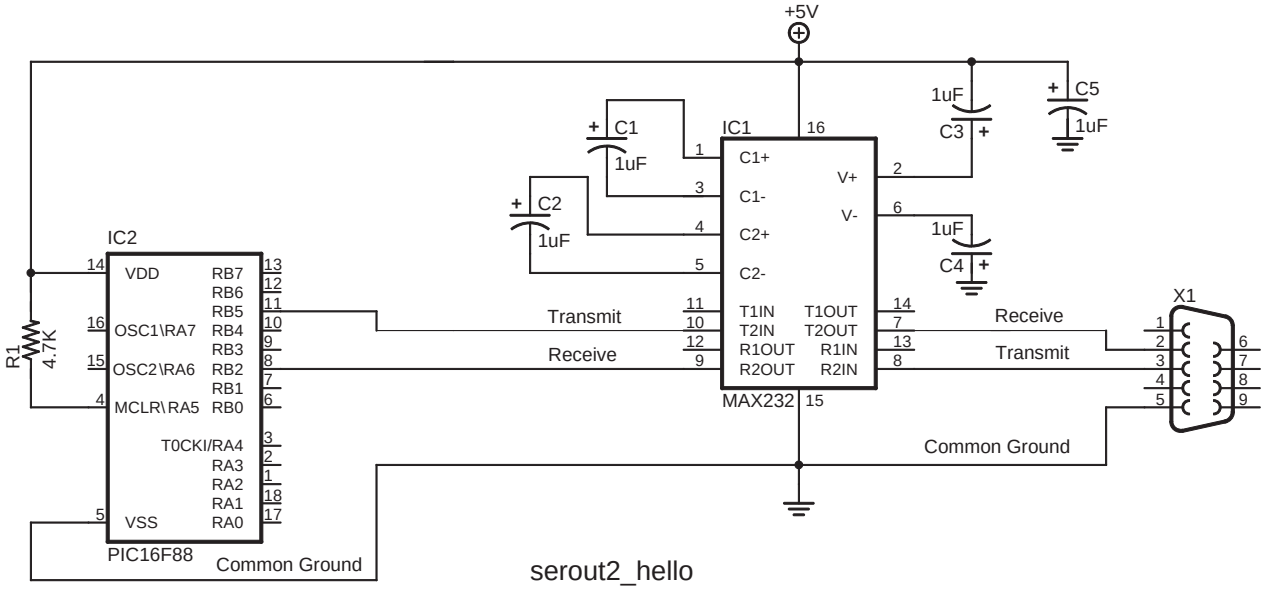

NOTE: Make certain that the polarity of each capacitor is wired correctly.